In situ CVD reactor

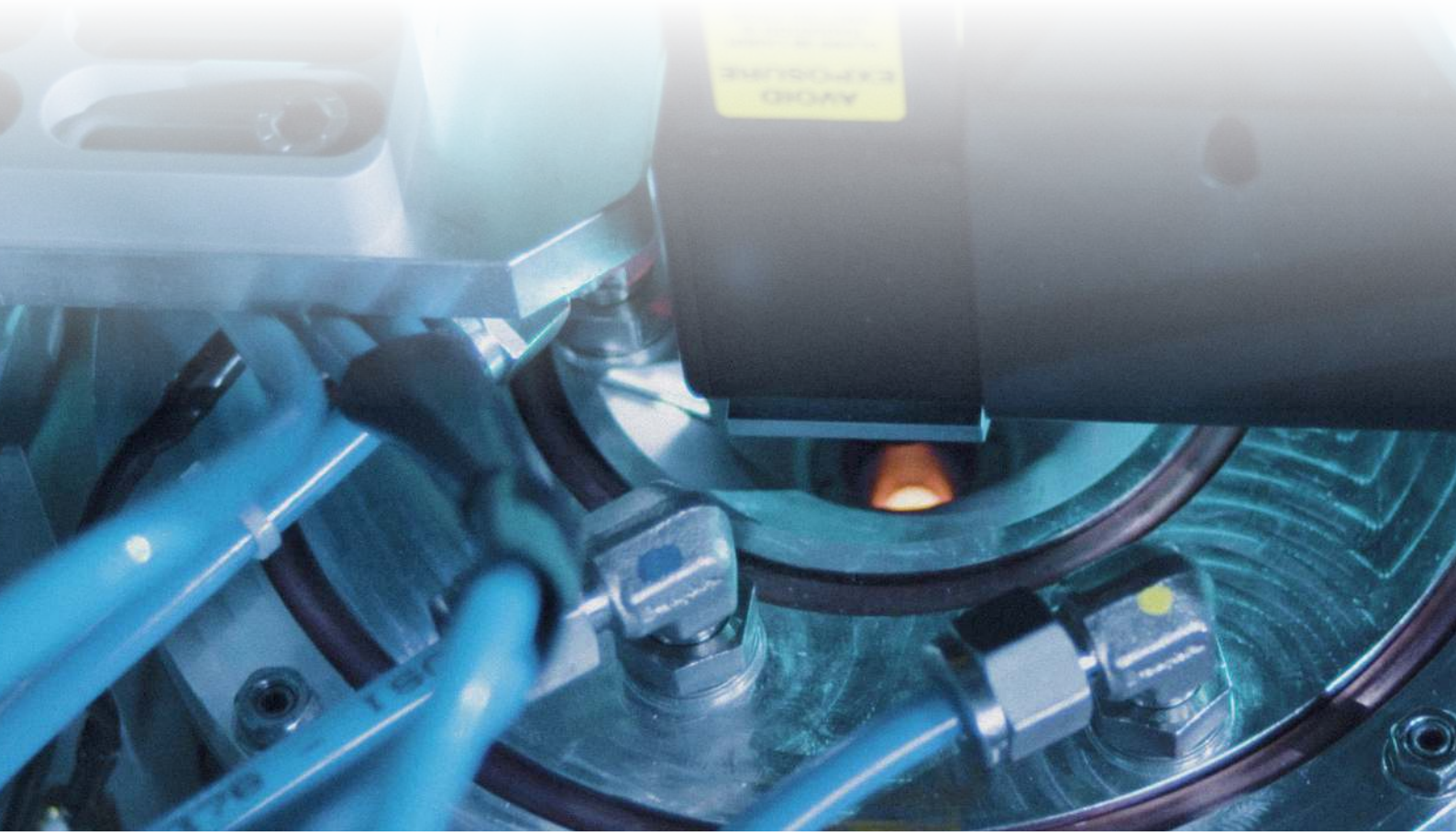

Gas

UHV - 5 bar

RT - 1400 K

Fields of Application

Controlled 2D material growth
Catalysis on (liquid) metals
Graphene growth
High temperature microscopy

In situ investigation of processes on materials at temperatures up to 1400 K in vacuum or gas environment

Design and application

The CVD reactor system is specifically designed to be compatible with in situ characterization of materials in a gas environment at very high temperatures >1400K. This makes it not only a perfect match for e.g. monitoring of 2D materials growth, but also for imaging processes like corrosion or melting at very high temperature.

The key of the design is in the patented geometry of the forced gas flow. Before the carrier gas and process gases do reach the sample area, they flow along the in situ window of the system, serving as coolant but at the same time preventing any deposition of evaporating metals on the window.

The possibility of using the well-known microscopy techniques at very high temperatures opens up the discovery and investigation of a new set of phenomena in the fields of material science, chemistry, geology etc. The in situ reactor allows the operator to study materials even above their melting point while maintaining the transparency of the imaging window and while keeping the objective cold. This can even be done at relatively small working distances in the order of 15mm.

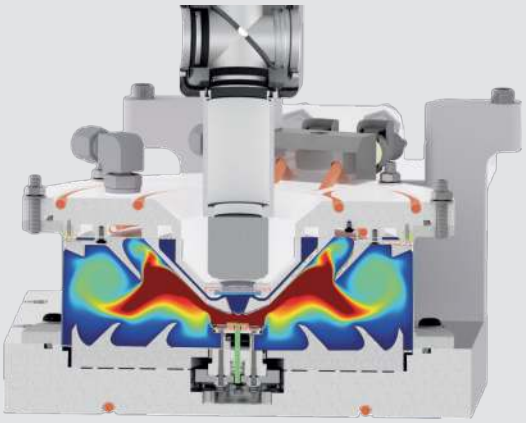

Cross sectional view of the reactor showing an optical microscope system with objective on top, sample heater stage at the bottom and the reactor volume with the special designed structures to deflect the gas flow. The color coding indicates the Cu vapor distribution in the reactor for a given gas flow rate and when a Cu substrate is heated above its melting point.

The applications are not limited to optical microscopy; the available techniques include also various spectroscopy measurements such as Raman and X-ray studies.

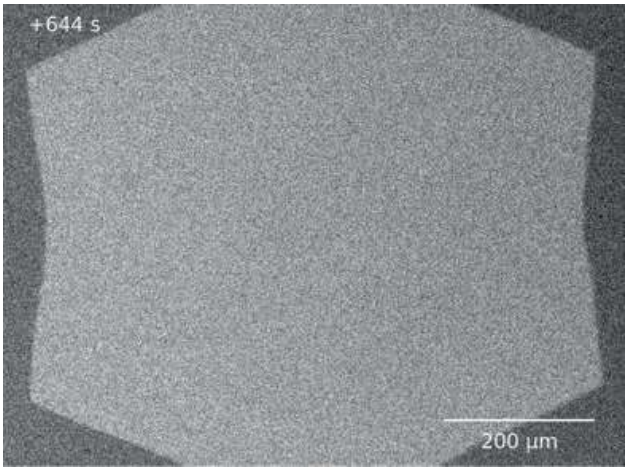

Application example: live imaging of Graphene growth

As an example application, we present some results on the direct observation of the growth of Graphene on a liquid Cu substrate. The opportunity to directly observe the effect of variation in process parameters such as temperature, reactor pressure, flow rates etc provides a very efficient way for optimizing nucleation and growth recipies for the production of various forms of graphene films. The results demonstrate that we were not only able to grow either multi-domain Graphene that is growing into a continuous film, but we also could change the growth conditions such that one big single crystalline Graphene flake was formed.

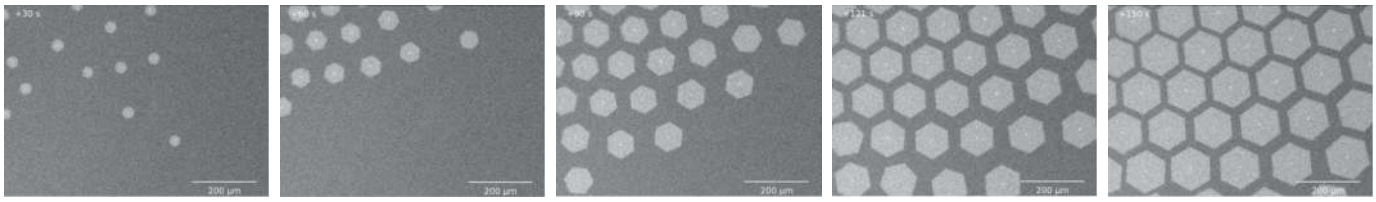

The above snapshots show the controlled growth of graphene on liquid copper at 1370K with 30 second intervals (from 30s to 150s). The snapshots are from a movie recorded with an optical microsope. The scalebar is 0.2 mm.

In situ high temperature surface-XRD

As an extension, the in situ reactor can be equipped with an X-ray transparent window. Several X-ray based techniques can be used for in situ investigations at very high temperature. As demonstration, we present grazing incidense X-ray reflectometry results on single layer graphene on liquid Cu, acquired at 1370K.

These data have been acquired by M. Jankowski and G. Reinaud, ESRF, Grenoble, France.

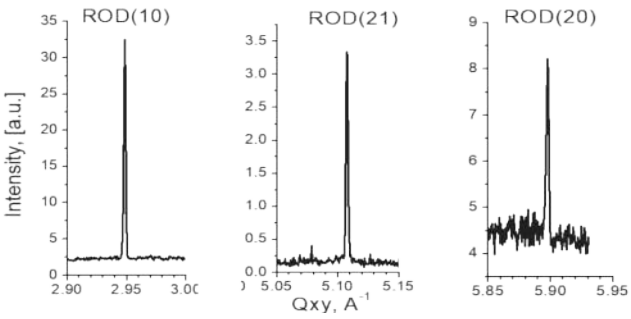

Grazing incident x-ray diffraction

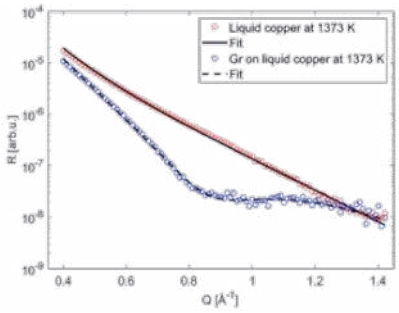

X-ray reflectometry

Gas mixing stage

A dedicated gas handling system has been developed for controlling both the CVD process gas flows and pressure as well as the carrier gas flow that keeps the in situ windows clean and cold.

The system is designed with special attention for **safety**, related to the use op potential hazardous gases such as H_2 and O_2. The system is fully PC controlled such that recipes can be pre-defined; front panel indicators and switches always provide information on the status of the valves and direct manual operation, overriding the software control.

All systems are ventilated; 3 separated compartments contain the elctronics, the gas containing lines and the H_2 compatible pump.

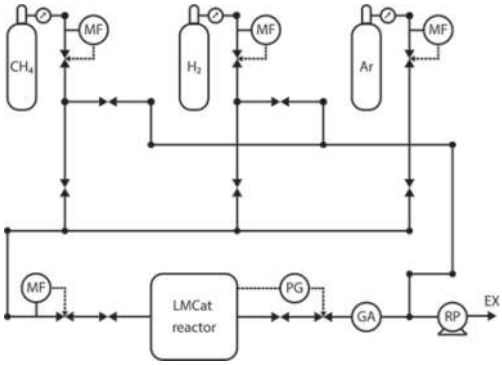

Sample heating

The CVD reactor includes a heating stage and PC operated PID controller providing a stable sample temperature as well as minimal heat loss to the reactor assembly. The thermal radiation shield also serves as sample holder clamp.

A simple bayonet mechanism provides sufficient clamping force to ensure a good thermal contact between the sample holder and the heater, while it also allows for easy sample replacement.

The total sample surface is 14 mm in diameter.

Configurations

The in situ CVD reactor can be supplied as a complete **PC-controlled turn-key system**, including the required gas mixing unit for different CVD and carrier gases, heater stage, pressure, flow and temperure controls, pumps and the required microscopy tools. Options include:

- Optical microscopy
- Raman spectroscopy
- Reflectometry / Dark field microscopy
- Actuated scanning stages
- Interfacing to X-ray goniometer stage

Alternatively, the CVD reactor can be **integrated with existing microscopy systems**, where we install all the requirements for the CVD process, including the gas handling and adapt the geomtery to fit the user microscope system.

A third option is to **integrate the cold and clean in situ window technology into a customer process chamber**. This can also include the supply of the microscope system. Contact us to discuss your details.

Specifications

Temperature (controlled)	RT – 1400 K
Pressure	Vacuum – >5 bar
Working distance	18 mm
Temperature objective (shielded and cooled)	<65 °C
Window material (microscopy/spectroscopy)	Quartz
Flow reactor	Vary gas pressure and mixture
Flat sample holder	Yes
Easy sample exchange	Yes

Optical Microscope Specifications

The optical microscope system can be configured to meet user specific requirements regarding magnification, field of view (FOV) and pixel resolution.

Some default configurations have been worked out below as an example. The installed 'filter cube' allows addition of user filters or expansion with auxiliary optics. Default CCD Camera's are C-mount, monochrome, USB3.

System Magnification	FOV horizontal x vertical [mm]	Pixel resolution [nm^2]
10x	1.1 x 0.7	586
10x	1.4 x 1.0	345
5x	2.2 x 1.4	1172
5x (*)	2.8 x 2.1	690
2.5x	4.5 x 2.8	2344

As with al our systems, the CVDreactor can be tailored to meet custom requirements. Please contact us for more information or custom options.